Standard Products

QCOTS™ UT7Q512 512K x 8 SRAM

Data Sheet
August 19, 2004

FEATURES

- 100ns (5 volt supply) maximum address access time
- Asynchronous operation for compatibility with industry-standard 512K x 8 SRAMs
- TTL compatible inputs and output levels, three-state bidirectional data bus
- Typical radiation performance
  - Total dose: 30krad(Si)
    - 30krad(Si) to 300krad(Si), depending on orbit, using Aeroflex UTMC patented shielded package
  - SEL Immune >80 MeV-cm^2/mg
  - $LET_{TH}(0.25)$ = 5MeV-cm^2/mg
  - Saturated Cross Section (cm^2) per bit, ~1.0E-7
    - 1.5E-8 errors/bit-day, Adams 90% geosynchronous heavy ion
- Packaging options:
  - 32-lead ceramic flatpack (weight 2.5-2.6 grams)
- Standard Microcircuit Drawing 5962-99606
  - QML T and Q compliant

INTRODUCTION

The QCOTS™ UT7Q512 Quantified Commercial Off-the-Shelf product is a high-performance CMOS static RAM organized as 524,288 words by 8 bits. Easy memory expansion is provided by an active LOW Chip Enable ($\overline{E}$), an active LOW Output Enable ($\overline{G}$), and three-state drivers. This device has a power-down feature that reduces power consumption by more than 90% when deselected.

Writing to the device is accomplished by taking the Chip Enable One ($\overline{E}$) input LOW and the Write Enable ($\overline{W}$) input LOW. Data on the eight I/O pins (DQ_0 through DQ_7) is then written into the location specified on the address pins (A_0 through A_{18}). Reading from the device is accomplished by taking Chip Enable One ($\overline{E}$) and Output Enable ($\overline{G}$) LOW while forcing Write Enable ($\overline{W}$) HIGH. Under these conditions, the contents of the memory location specified by the address pins will appear on the eight I/O pins.

The eight input/output pins (DQ_0 through DQ_7) are placed in a high impedance state when the device is deselected ($\overline{E}$, HIGH), the outputs are disabled ($\overline{G}$ HIGH), or during a write operation ($\overline{E}$ LOW and $\overline{W}$ LOW).

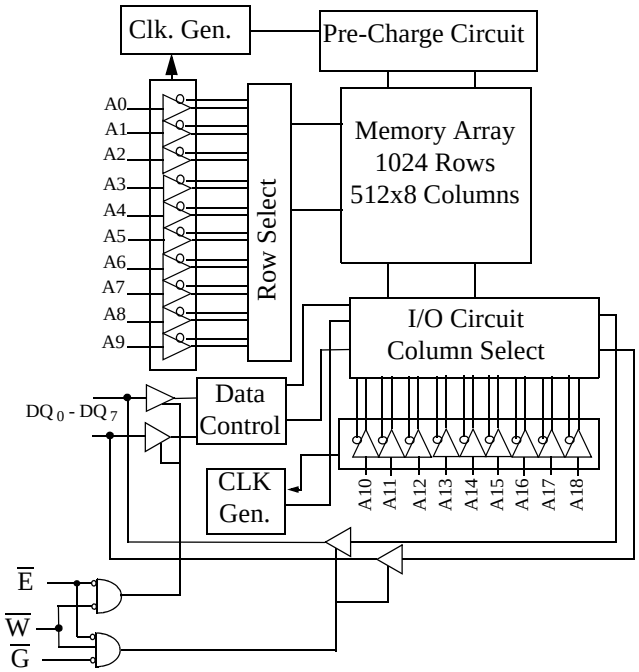

Figure 1. UT7Q512 SRAM Block Diagram

PIN NAMES

A(18:0)	Address
DQ(7:0)	Data Input/Output
$\overline{E}$	Chip Enable
$\overline{W}$	Write Enable
$\overline{G}$	Output Enable
V_{DD}	Power
V_{SS}	Ground

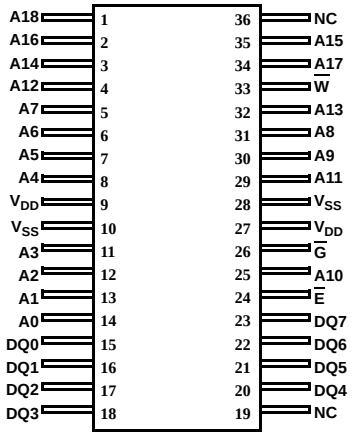

Figure 2a. UT7Q512 100ns SRAM Shielded Package Pinout (36)

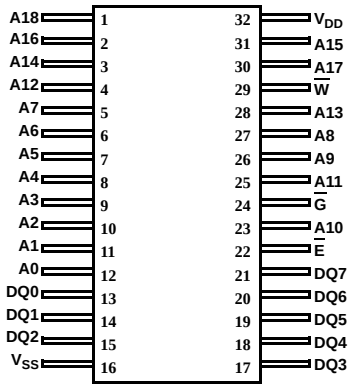

Figure 2b. UT7Q512 100ns SRAM Package Pinout (32)

DEVICE OPERATION

The UT7Q512 has three control inputs called Enable 1 ($\overline{E}$), Write Enable ($\overline{W}$), and Output Enable ($\overline{G}$); 19 address inputs, A(18:0); and eight bidirectional data lines, DQ(7:0). The $\overline{E}$ Device Enable controls device selection, active, and standby modes. Asserting $\overline{E}$ enables the device, causes I_{DD} to rise to its active value, and decodes the 19 address inputs to select one of 524,288 words in the memory. $\overline{W}$ controls read and write operations. During a read cycle, $\overline{G}$ must be asserted to enable the outputs.

Table 1. Device Operation Truth Table

$\overline{G}$	$\overline{W}$	$\overline{E}$	I/O Mode	Mode
X[1]	X	1	3-state	Standby
X	0	0	Data in	Write
1	1	0	3-state	Read[2]
0	1	0	Data out	Read

Notes:
1. "X" is defined as a "don't care" condition.
2. Device active; outputs disabled.

READ CYCLE

A combination of $\overline{W}$ greater than V_{IH} (min), $\overline{G}$ and $\overline{E}$ less than V_{IL} (max) defines a read cycle. Read access time is measured from the latter of Device Enable, Output Enable, or valid address to valid data output.

SRAM read Cycle 1, the Address Access in figure 3a, is initiated by a change in address inputs while the chip is enabled with $\overline{G}$ asserted and $\overline{W}$ deasserted. Valid data appears on data outputs DQ(7:0) after the specified t_{AVQV} is satisfied. Outputs remain active throughout the entire cycle. As long as Device Enable and Output Enable are active, the address inputs may change at a rate equal to the minimum read cycle time (t_{AVAV}).

SRAM read Cycle 2, the Chip Enable-Controlled Access in figure 3b, is initiated by $\overline{E}$ going active while $\overline{G}$ remains asserted, $\overline{W}$ remains deasserted, and the addresses remain stable for the entire cycle. After the specified t_{ETQV} is satisfied, the eight-bit word addressed by A(18:0) is accessed and appears at the data outputs DQ(7:0).

SRAM read Cycle 3, the Output Enable-Controlled Access in figure 3c, is initiated by $\overline{G}$ going active while $\overline{E}$ is asserted, $\overline{W}$ is deasserted, and the addresses are stable. Read access time is t_{GLQV} unless t_{AVQV} or t_{ETQV} have not been satisfied.

WRITE CYCLE

A combination of $\overline{W}$ less than V_{IL}(max) and $\overline{E}$ less than V_{IL}(max) defines a write cycle. The state of $\overline{G}$ is a "don't care" for a write cycle. The outputs are placed in the high-impedance state when either $\overline{G}$ is greater than V_{IH}(min), or when $\overline{W}$ is less than V_{IL}(max).

Write Cycle 1, the Write Enable-Controlled Access in figure 4a, is defined by a write terminated by $\overline{W}$ going high, with $\overline{E}$ still active. The write pulse width is defined by t_{WLWH} when the write is initiated by $\overline{W}$, and by t_{ETWH} when the write is initiated by $\overline{E}$. Unless the outputs have been previously placed in the high-impedance state by $\overline{G}$, the user must wait t_{WLQZ} before applying data to the nine bidirectional pins DQ(7:0) to avoid bus contention.

Write Cycle 2, the Chip Enable-Controlled Access in figure 4b, is defined by a write terminated by the latter of $\overline{E}$ going inactive. The write pulse width is defined by t_{WLEF} when the write is initiated by $\overline{W}$, and by t_{ETEF} when the write is initiated by the $\overline{E}$ going active. For the $\overline{W}$ initiated write, unless the outputs have been previously placed in the high-impedance state by $\overline{G}$, the user must wait t_{WLQZ} before applying data to the eight bidirectional pins DQ(7:0) to avoid bus contention.

TYPICAL RADIATION HARDNESS

Table 2. Typical Radiation Hardness Design Specifications[1]

Total Dose	30	krad(Si) nominal
Heavy Ion Error Rate[2]	1.5E-7	Errors/Bit-Day

Notes:
1. The SRAM will not latchup during radiation exposure under recommended operating conditions.
2. 90% worst case particle environment, Geosynchronous orbit, 100 mils of Aluminum.

ABSOLUTE MAXIMUM RATINGS[1]

(Referenced to V_{SS})

SYMBOL	PARAMETER	LIMITS
V_{DD}	DC supply voltage	-0.5 to 7.0V
$V_{I/O}$	Voltage on any pin	-0.5 to 7.0V
T_{STG}	Storage temperature	-65 to +150°C
P_D	Maximum power dissipation	1.0W
T_J	Maximum junction temperature[2]	+150°C
Θ_{JC}	Thermal resistance, junction-to-case[3]	10°C/W
I_I	DC input current	±10 mA

Notes:

1. Stresses outside the listed absolute maximum ratings may cause permanent damage to the device. This is a stress rating only, and functional operation of the device at these or any other conditions beyond limits indicated in the operational sections of this specification is not recommended. Exposure to absolute maximum rating conditions for extended periods may affect device reliability and performance.
2. Maximum junction temperature may be increased to +175°C during burn-in and steady-static life.
3. Test per MIL-STD-883, Method 1012.

RECOMMENDED OPERATING CONDITIONS

SYMBOL	PARAMETER	LIMITS
V_{DD}	Positive supply voltage	4.5 to 5.5V
T_C	Case temperature range	-55 to +125°C
V_{IN}	DC input voltage	0V to V_{DD}

DC ELECTRICAL CHARACTERISTICS (Pre/Post-Radiation)*

(V_{DD} = 5.0V±10%) (-55°C to +125°C)

SYMBOL	PARAMETER	CONDITION		MIN	MAX	UNIT
V_{IH}	High-level input voltage			2.2		V
V_{IL}	Low-level input voltage				.8	V
V_{OL}	Low-level output voltage	I_{OL} = 2.1mA,V_{DD} =4.5V			0.4	V
V_{OH}	High-level output voltage	I_{OH} = -1mA,V_{DD} =4.5V		2.4		V
C_{IN}[1]	Input capacitance	f = 1MHz @ 0V			10	pF
C_{IO}[1]	Bidirectional I/O capacitance	f = 1MHz @ 0V			10	pF
I_{IN}	Input leakage current	$V_{SS} \leq V_{IN} \leq V_{DD}$, $V_{DD} = V_{DD}$ (max)		-2	2	µA
I_{OZ}	Three-state output leakage current	$0V \leq V_O \leq V_{DD}$ $V_{DD} = V_{DD}$ (max) $\overline{G} = V_{DD}$ (max)		-2	2	µA
I_{OS}[2, 3]	Short-circuit output current	$0V \leq V_O \leq V_{DD}$		-80	80	mA
I_{DD}(OP)	Supply current operating @ 1MHz	Inputs: $V_{IL} = V_{SS}$ + 0.8V, V_{IH} = 2.2V I_{OUT} = 0mA $V_{DD} = V_{DD}$ (max)			50	mA
I_{DD1}(OP)	Supply current operating @10MHz	Inputs: $V_{IL} = V_{SS}$ + 0.8V, V_{IH} = 2.2V I_{OUT} = 0mA $V_{DD} = V_{DD}$ (max)			100	mA
I_{DD2}(SB)	Nominal standby supply current @0MHz	Inputs: $V_{IL} = V_{SS}$ I_{OUT} = 0mA $\overline{E} = V_{DD}$ - 0.5 $V_{DD} = V_{DD}$ (max) $V_{IH} = V_{DD}$ - 0.5V	-55°C and 25°C		35	µA
			+125°C		1	mA

Notes:

* Post-radiation performance guaranteed at 25°C per MIL-STD-883 Method 1019.

1. Measured only for initial qualification and after process or design changes that could affect input/output capacitance.
2. Supplied as a design limit but not guaranteed or tested.
3. Not more than one output may be shorted at a time for maximum duration of one second.

AC CHARACTERISTICS READ CYCLE (Pre/Post-Radiation)*

(V_{DD} = 5.0V±10%) (-55°C to +125°C)

SYMBOL	PARAMETER	MIN	MAX	UNIT
t_{AVAV}[1]	Read cycle time	100		ns
t_{AVQV}	Read access time		100	ns
t_{AXQX}[2]	Output hold time	10		ns
t_{GLQX}[2]	$\overline{G}$-controlled Output Enable time	5		ns
t_{GLQV}	$\overline{G}$-controlled Output Enable time (Read Cycle 3)		50	ns
t_{GHQZ}[2]	$\overline{G}$-controlled output three-state time		30	ns
t_{ETQX}[2,3]	$\overline{E}$-controlled Output Enable time	10		ns
t_{ETQV}[3]	$\overline{E}$-controlled access time		100	ns
t_{EFQZ}[1,2,4]	$\overline{E}$-controlled output three-state time		30	ns

Notes: * Post-radiation performance guaranteed at 25°C per MIL-STD-883 Method 1019.
1. Functional test.
2. Three-state is defined as a 500mV change from steady-state output voltage (see Figure 3).
3. The ET (enable true) notation refers to the falling edge of $\overline{E}$. SEU immunity does not affect the read parameters.
4. The EF (enable false) notation refers to the rising edge of $\overline{E}$. SEU immunity does not affect the read parameters.

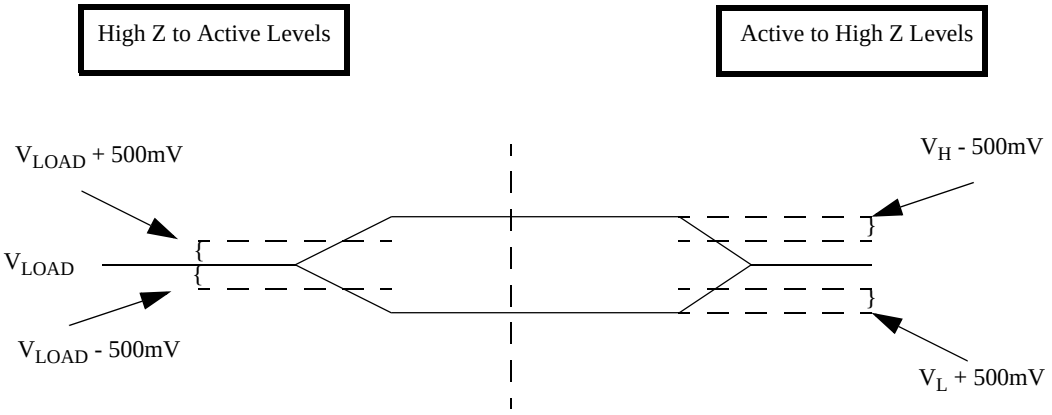

Figure 3. 5-Volt SRAM Loading

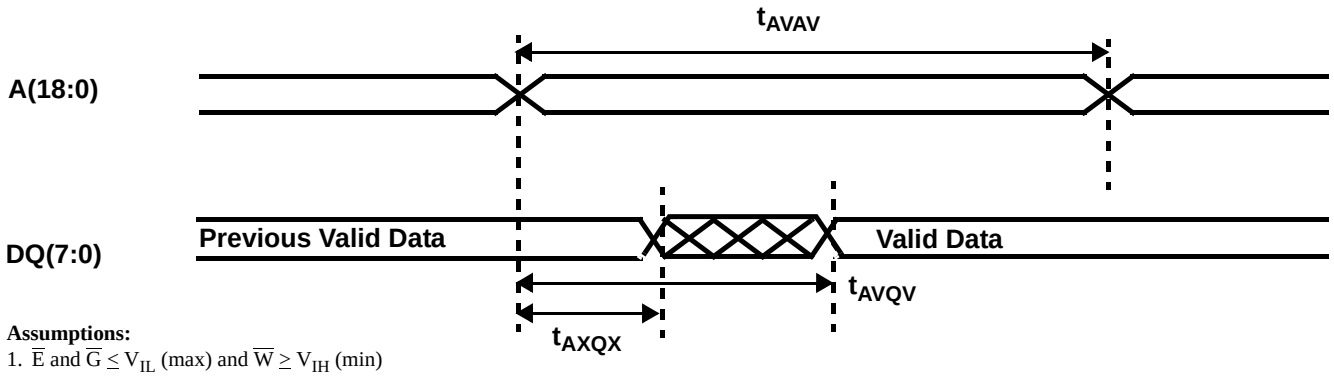

Assumptions:
1. $\overline{E}$ and $\overline{G} \leq V_{IL}$ (max) and $\overline{W} \geq V_{IH}$ (min)

Figure 4a. SRAM Read Cycle 1: Address Access

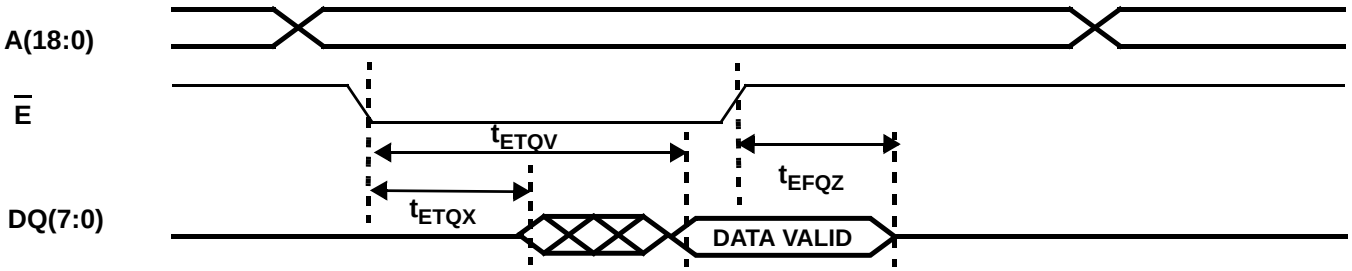

Assumptions:
1. $\overline{G} \leq V_{IL}$ (max) and $\overline{W} \geq V_{IH}$ (min)

Figure 4b. SRAM Read Cycle 2: Chip Enable - Controlled Access

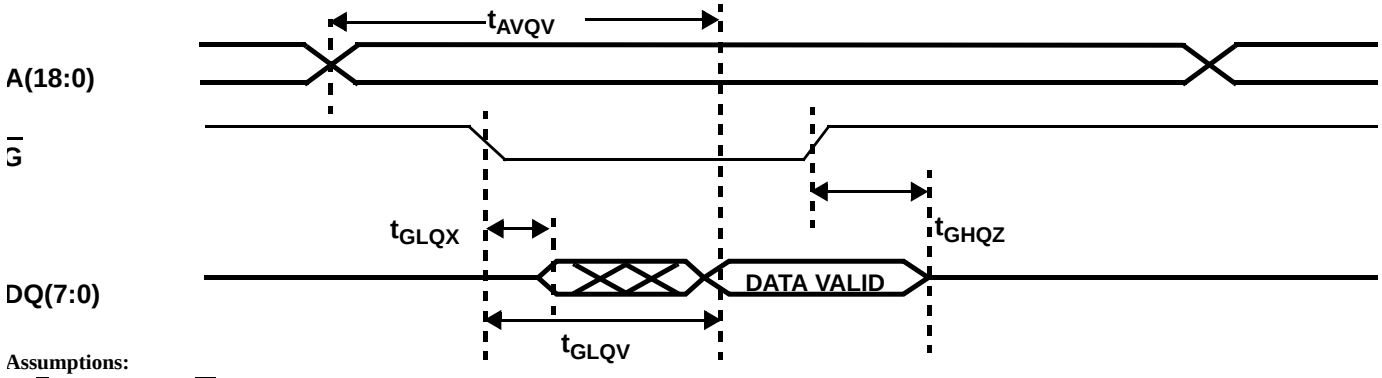

Assumptions:
1. $\overline{E} \leq V_{IL}$ (max) and $\overline{W} \geq V_{IH}$ (min)

Figure 4c. SRAM Read Cycle 3: Output Enable - Controlled Access

AC CHARACTERISTICS WRITE CYCLE (Pre/Post-Radiation)*

(V_{DD} = 5.0V±10%) (-55°C to +125°C)

SYMBOL	PARAMETER	MIN	MAX	UNIT
t_{AVAV}[1]	Write cycle time	100		ns
t_{ETWH}	Device Enable to end of write	80		ns
t_{AVET}	Address setup time for write ($\overline{E}$ - controlled)	0		ns
t_{AVWL}	Address setup time for write ($\overline{W}$ - controlled)	0		ns
t_{WLWH}	Write pulse width	60		ns
t_{WHAX}	Address hold time for write ($\overline{W}$ - controlled)	0		ns
t_{EFAX}	Address hold time for Device Enable ($\overline{E}$ - controlled)	0		ns
t_{WLQZ}[2]	$\overline{W}$ - controlled three-state time		30	ns
t_{WHQX}[2]	$\overline{W}$ - controlled Output Enable time	5		ns
t_{ETEF}	Device Enable pulse width ($\overline{E}$ - controlled)	80		ns
t_{DVWH}	Data setup time	40		ns
t_{WHDX}	Data hold time	0		ns
t_{WLEF}	Device Enable controlled write pulse width	80		ns
t_{DVEF}	Data setup time	40		ns
t_{EFDX}	Data hold time	0		ns
t_{AVWH}	Address valid to end of write	80		ns
t_{WHWL}[1]	Write disable time	5		ns

Notes:

* Post-radiation performance guaranteed at 25°C per MIL-STD-883 Method 1019

1. Functional test performed with outputs disabled ($\overline{G}$ high).
2. Three-state is defined as 500mV change from steady-state output voltage (see Figure 3).

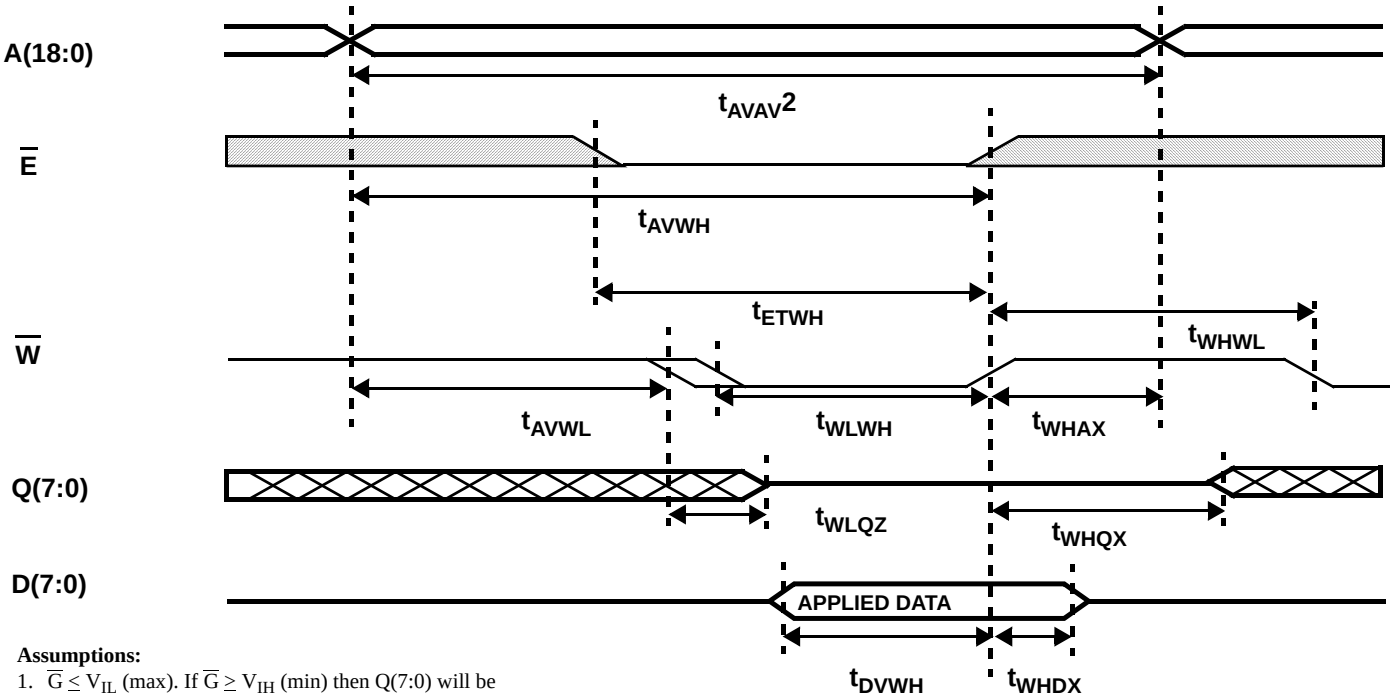

Assumptions:

1. $\overline{G} \leq V_{IL}$ (max). If $\overline{G} \geq V_{IH}$ (min) then Q(7:0) will be in three-state for the entire cycle.
2. $\overline{G}$ high for t_{AVAV} cycle.

Figure 5a. SRAM Write Cycle 1: Write Enable - Controlled Access

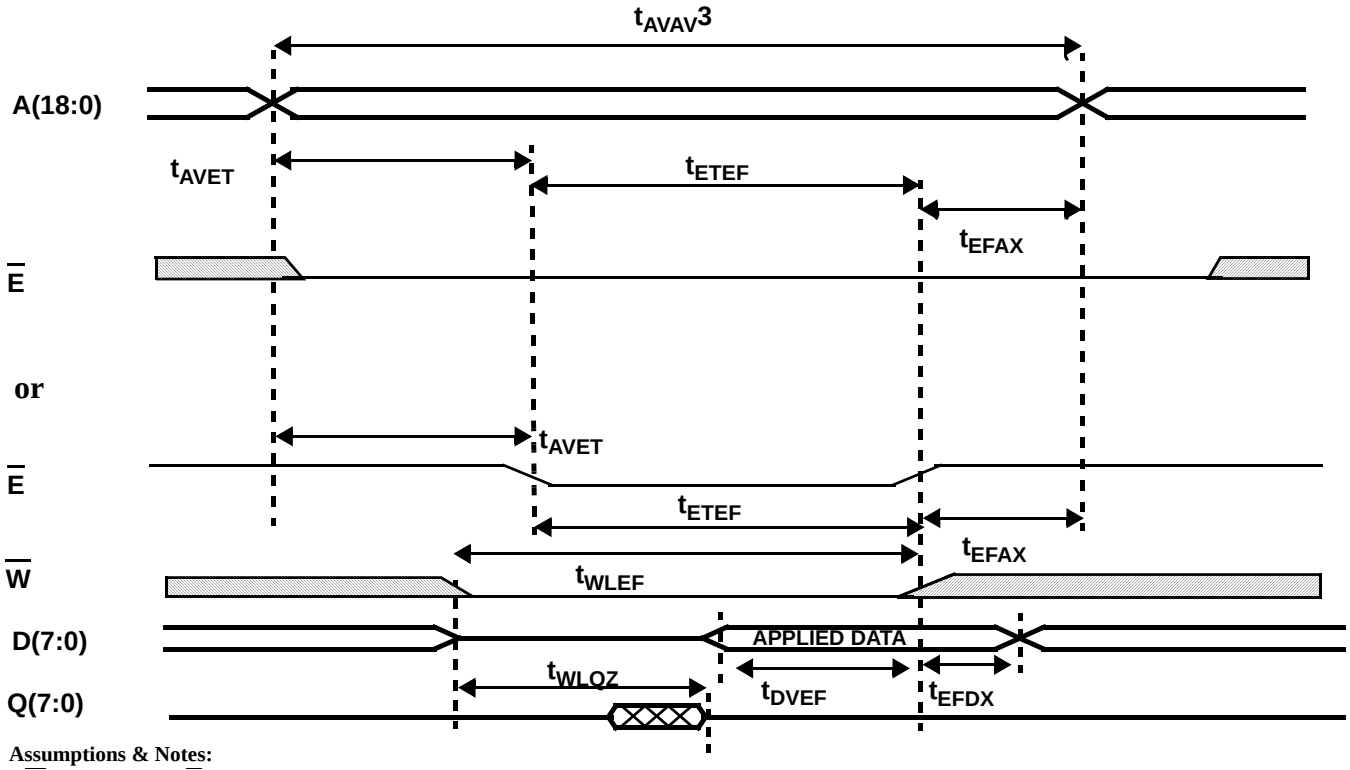

Assumptions & Notes:

1. $\overline{G} \leq V_{IL}$ (max). If $\overline{G} \geq V_{IH}$ (min) then Q(7:0) will be in three-state for the entire cycle.
2. Either $\overline{E}$ scenario above can occur.
3. $\overline{G}$ high for t_{AVAV} cycle.

Figure 5b. SRAM Write Cycle 2: Chip Enable - Controlled Access

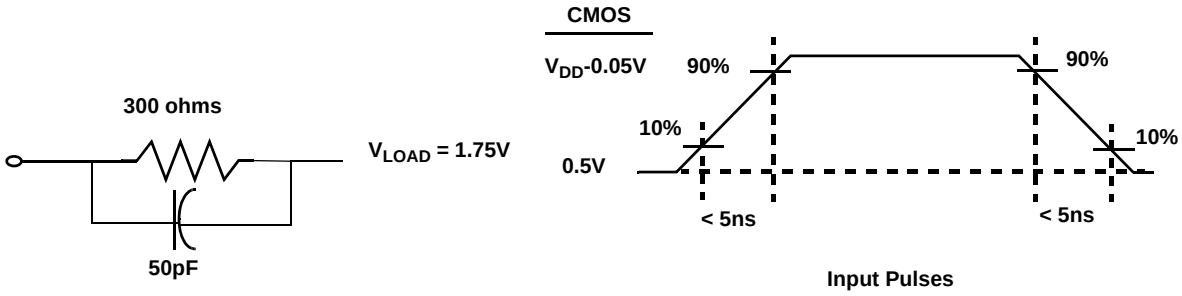

Notes:

1. 50pF including scope probe and test socket capacitance.
2. Measurement of data output occurs at the low to high or high to low transition mid-point (i.e., CMOS input = $V_{DD}/2$).

Figure 6. AC Test Loads and Input Waveforms

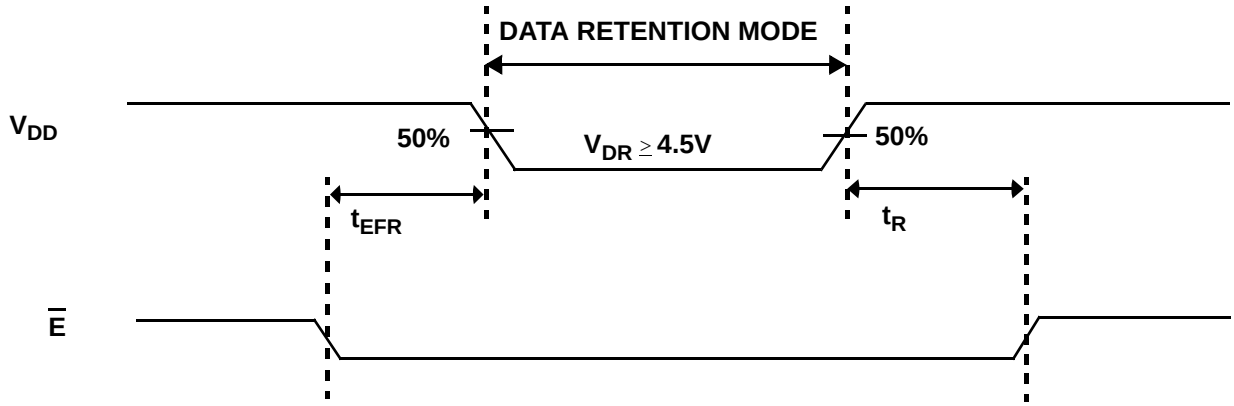

Figure 7. Low V_{DD} Data Retention Waveform (100ns)

DATA RETENTION CHARACTERISTICS (Pre/Post-Irradiation)
(T_C = 25°C, 1 Sec Data Retention Test)

SYMBOL	PARAMETER	MINIMUM	MAXIMUM	UNIT
V_{DR}	V_{DD} for data retention	4.5	--	V
I_{DDR} [1]	Data retention current	--	.4	mA
t_{EFR} [1,2]	Chip deselect to data retention time	0		ns
t_R [1,2]	Operation recovery time	t_{AVAV}		ns

Notes:
1. $\overline{E} = V_{SS}$, all other inputs = V_{DR} or V_{SS}.
2. Not guaranteed or tested.

DATA RETENTION CHARACTERISTICS (Pre/Post-Irradiation)
(T_C = 25°C, 10 Second Data Retention Test)

SYMBOL	PARAMETER	MINIMUM	MAXIMUM	UNIT
V_{DD} [1]	V_{DD} for data retention	4.5	5.5	V
t_{EFR} [2, 3]	Chip select to data retention time	0		ns
t_R [2, 3]	Operation recovery time	t_{AVAV}		ns

Notes:
1. Performed at V_{DD} (min) and V_{DD} (max).
2. $\overline{E} = V_{SS}$, all other inputs = V_{DR} or V_{SS}.
3. Not guaranteed or tested.

PACKAGING

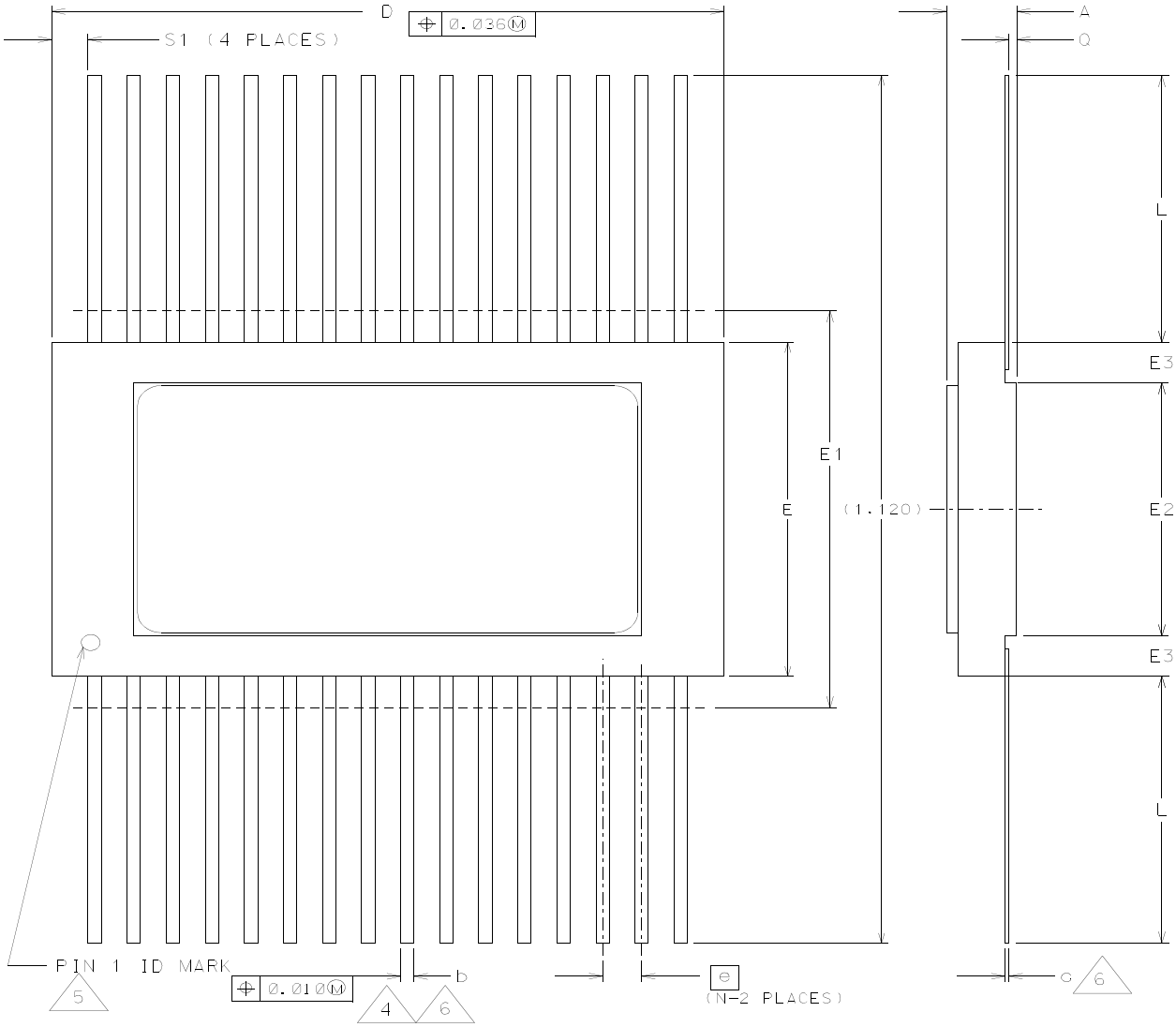

44095 PKG CONFIG	LEAD COUNT (N)	MIL-STD 1835 DWG CONF B	DIMENSION SYMBOLS (32-Lead Flatpack shown)											
			A	b	c	D	E	E1	E2	E3	e	L	Q	S1
-07	32	F-18	0.120	0.020	0.007	0.830	0.488	0.498	-----	-----	0.050	0.370	0.045	-----
			0.090	0.015	0.004	-----	0.472	-----	0.350	0.030	BSC	0.270	0.026	0.005

1. All exposed metalized areas are gold plated over electroplated nickel per MIL-PRF-38535.
2. The lid is electrically connected to V_{SS}.
3. Lead finishes are in accordance to MIL-PRF-38535.
4. Lead position and coplanarity are not measured.
5. ID mark is vendor option.
6. With solder increase maximum by 0.003".
7. Weight 2.5-2.6 grams.

Figure 8. 32-pin Ceramic FLATPACK package

ORDERING INFORMATION

512K x 8 SRAM:

UT7Q512 - * * * *

Lead Finish:
(A) = Hot solder dipped
(C) = Gold
(X) = Factory option (gold or solder)

Screening:
(C) = Military Temperature Range flow
(P) = Prototype flow
(W) = Extended Industrial Temperature Range Flow (-40°C to +125°C)

Package Type:
(U) = 32-lead ceramic flatpack package (bottom brazed)

- = 100ns access time, 5V operation

Aeroflex UTMC Core Part Number

Notes:
1. Lead finish (A,C, or X) must be specified.
2. If an "X" is specified when ordering, then the part marking will match the lead finish and will be either "A" (solder) or "C" (gold).
3. Prototype flow per UTMC Manufacturing Flows Document. Tested at 25°C only. Lead finish is GOLD ONLY. Radiation neither tested nor guaranteed.
4. Military Temperature Range flow per UTMC Manufacturing Flows Document. Devices are tested at -55°C, room temp, and +125°C. Radiation neither tested nor guaranteed.
5. Extended Industrial Temperature Range flow per UTMC Manufacturing Flows Document. Devices are tested at -40°C to +125°C. Radiation neither tested nor guaranteed. Gold Lead Finish Only.

512K x 8 SRAM: SMD

5962 - 99606 ** * * *

Lead Finish:
(A) = Hot solder dipped
(C) = Gold
(X) = Factory Option (gold or solder)

Case Outline:
(U) = 32-lead ceramic flatpack package (bottom-brazed)

Class Designator:
(T) = QML Class T
(Q) = QML Class Q

Device Type
01 = 100ns access time, 5.0 volt operation, Mil-Temp
02 = 100ns access time, 5.0 volt operation, Extended Industrial Temp (-40°C to +125°C)

Drawing Number: 99606

Total Dose
(D) = 1E4 (10krad(Si))
(P) = 3E4 (30krad(Si)), Contact Factory

Federal Stock Class Designator: No Options

Notes:
1.Lead finish (A,C, or X) must be specified.
2.If an “X” is specified when ordering, part marking will match the lead finish and will be either “A” (solder) or “C” (gold).
3.Total dose radiation must be specified when ordering.

NOTES

Aeroflex Colorado Springs - Datasheet Definition

Advanced Datasheet - Product In Development

Preliminary Datasheet - Shipping Prototype

Datasheet - Shipping QML & Reduced Hi-Rel

COLORADO
Toll Free: 800-645-8862
Fax: 719-594-8468

INTERNATIONAL
Tel: 805-778-9229
Fax: 805-778-1980

NORTHEAST
Tel: 603-888-3975
Fax: 603-888-4585

SE AND MID-ATLANTIC
Tel: 321-951-4164
Fax: 321-951-4254

WEST COAST
Tel: 949-362-2260
Fax: 949-362-2266

CENTRAL
Tel: 719-594-8017
Fax: 719-594-8468

www.aeroflex.com/RadHard
info-ams@aeroflex.com

Aeroflex Colorado Springs, Inc. (Aeroflex) reserves the right to make changes to any products and services herein at any time without notice. Consult Aeroflex or an authorized sales representative to verify that the information in this data sheet is current before using this product. Aeroflex does not assume any responsibility or liability arising out of the application or use of any product or service described herein, except as expressly agreed to in writing by Aeroflex; nor does the purchase, lease, or use of a product or service from Aeroflex convey a license under any patent rights, copyrights, trademark rights, or any other of the intellectual rights of Aeroflex or of third parties.

AEROFLEX
A passion for performance.

Our passion for performance is defined by three attributes represented by these three icons: solution-minded, performance-driven and customer-focused